USER'S MANUAL

OV / OVK / OV1 / OV1 R / OVK1 / VKF / VKOM / OVP

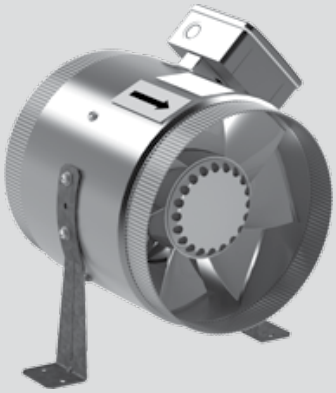

INDUSTRIAL ELECTRIC AXIAL FANS

VENTS

CONTENTS

Safety requirements 2
Purpose 4
Delivery set 4
Designation key 4
Technical data 5
Unit design and operating principle 10
Mounting and set-up 12
Connection to power mains 16
Technical maintenance 19
Troubleshooting 21
Storage and transportation regulations 21
Manufacturer's warranty 22
Certificate of acceptance 23
Seller information 23
Installation certificate 23
Warranty card 23

This user's manual is a main operating document intended for technical, maintenance, and operating staff.
The manual contains information about purpose, technical details, operating principle, design, and installation of the OV / OVK / OV1 / OV1 R / OVK1 / VKF / VKOM / OVP unit and all its modifications.
Technical and maintenance staff must have theoretical and practical training in the field of ventilation systems and should be able to work in accordance with workplace safety rules as well as construction norms and standards applicable in the territory of the country.
The information in this user's manual is correct at the time of the document's preparation.
The Company reserves the right to modify the technical characteristics, design, or configuration of its products at any time in order to incorporate the latest technological developments.
No part of this publication may be reproduced, stored in a retrieval system, or transmitted, in any form or by any means in any information search system or translated into any language in any form without the prior written permission of the Company.

SAFETY REQUIREMENTS

- Please read the user's manual carefully prior to installing and operating the unit.
- All user's manual requirements as well as the provisions of all the applicable local and national construction, electrical, and technical norms and standards must be observed when installing and operating the unit.
- The warnings contained in the user's manual must be considered most seriously since they contain vital personal safety information.
- Failure to follow the rules and safety precautions noted in this user's manual may result in an injury or unit damage.
- After a careful reading of the manual, keep it for the entire service life of the unit.
- While transferring the unit control, the user's manual must be turned over to the receiving operator.

UNIT INSTALLATION AND OPERATION SAFETY PRECAUTIONS

- Disconnect the unit from power mains prior to any installation operations.

- Unpack the unit with care.

- The unit must be grounded!

- While installing the unit, follow the safety regulations specific to the use of electric tools.

- Do not change the power cable length at your own discretion.
- Do not bend the power cable.
- Avoid damaging the power cable.
- Do not put any foreign objects on the power cable.

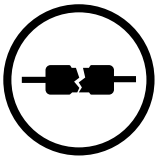

- Do not use damaged equipment or cables when connecting the unit to power mains.

- Do not touch the unit controls with wet hands.
- Do not carry out the installation and maintenance operations with wet hands.

- Do not allow children to operate the unit.

- Do not store any explosive or highly flammable substances in close proximity to the unit.

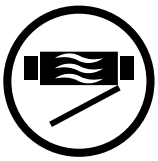

- Do not open the unit during operation.

- Do not block the air duct when the unit is switched on.

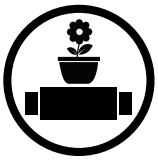

- Do not sit on the unit and avoid placing foreign objects on it.

- Do not lay the power cable of the unit in close proximity to heating equipment.

- Do not operate the unit outside the temperature range stated in the user's manual.
- Do not operate the unit in aggressive or explosive environments.

- Do not wash the unit with water.
- Protect the electric parts of the unit against ingress of water.

- Disconnect the unit from power mains prior to any technical maintenance.

- When the unit generates unusual sounds, odour, or emits smoke, disconnect it from power supply and contact the Seller.

- Do not direct the air flow produced by the unit towards open flame or ignition sources.

- In case of continuous operation of the unit, periodically check the security of mounting.

- Use the unit only for its intended purpose.

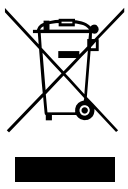

THE PRODUCT MUST BE DISPOSED SEPARATELY AT THE END OF ITS SERVICE LIFE.
DO NOT DISPOSE THE UNIT AS UNSORTED DOMESTIC WASTE.

PURPOSE

THE UNIT SHOULD NOT BE OPERATED BY CHILDREN OR PERSONS WITH REDUCED PHYSICAL, MENTAL, OR SENSORY CAPACITIES, OR THOSE WITHOUT THE APPROPRIATE TRAINING.

THE UNIT MUST BE INSTALLED AND CONNECTED ONLY BY PROPERLY QUALIFIED PERSONNEL AFTER THE APPROPRIATE BRIEFING.

THE CHOICE OF UNIT INSTALLATION LOCATION MUST PREVENT UNAUTHORIZED ACCESS BY UNATTENDED CHILDREN.

Industrial electric axial fans are designed for direct extraction of indoor air outdoors and supply of fresh outdoor air into the premises.
The unit is a component part and is not designed for stand-alone operation.
The unit is rated for continuous operation.
Transported air must not contain any flammable or explosive mixtures, evaporation of chemicals, sticky substances, fibrous materials, coarse dust, soot and oil particles or environments favorable for the formation of hazardous substances (toxic substances, dust, pathogenic germs).

DELIVERY SET

OV / OVK / VKF / OV1 / OV1 R / OVK1

NAME	NUMBER
Fan	1 piece
User's manual	1 piece
Packing	1 piece

OVP / VKOM

NAME	NUMBER
Fan	1 piece
Mounting brackets	2 pieces
User's manual	1 piece
Packing	1 piece

DESIGNATION KEY

Designation example: **OVK 4E 200**

Model
OV: axial fans with a square plate
OVK: axial fans with a round plate
VKF: duct axial fan with a connection flange
OVP: duct axial fan

Number of poles
2, 4, 6, 8

Phases
E: single-phase
D: three-phase

Standard size
200, 250, 300, 350, 400, 450, 500, 550, 630, 710, 800

Designation example: **OVK1 200**

Model
OV1: axial fan with a square plate
OVK1: axial fan with a round plate
OV1 R: axial fan with a plastic grille
VKOM: axial inline fan in metal casing

Standard size
150, 200, 250, 315

TECHNICAL DATA

The corrosive aggressiveness of the handled medium to carbon steels of ordinary quality must be equal to that of air at temperatures ranging from -25 °C to +40/60 °C. In addition to that the handled media must be free from dust and other hard impurities as well as sticky substances and fibrous materials.

	OV / OVK / VKF 2E 200		**OV / OVK / VKF 2E 250**		**OV / OVK / VKF 4E 250**		**OV / OVK / VKF 2E 300**		**OV / OVK / VKF 4E 300**		**OV / OVK / VKF 4E 350**		**OV / OVK / VKF 4E 400**	
Voltage [V]	1 ~ 230		1 ~ 230		1 ~ 230		1 ~ 230		1 ~ 230		1 ~ 230		1 ~ 230	
Frequency [Hz]	50	60	50	60	50	60	50	60	50	60	50	60	50	60
Power [W]	55	61	80	91	50	56	145	178	75	92	140	147	180	240
Current [A]	0.26	0.28	0.4	0.42	0.22	0.24	0.66	0.79	0.35	0.4	0.65	0.66	0.82	1.08
Max. air flow [m³/h]	860 (239)	875 (243)	1050 (292)	1150 (319)	800 (222)	865 (240)	2230 (619)	2280 (633)	1340 (372)	1475 (410)	2500 (695)	2650 (736)	3580 (995)	3890 (1081)
RPM [min^{-1}]	2300	2550	2400	2990	1380	1730	2300	2410	1350	1405	1380	1700	1380	1655
Noise level at 3 m [dBA]	48	49	50	51	38	39	53	54	44	45	46	47	53	54
Transported air temperature [°C]	-30...+60	-30...+50	-30...+60	-30...+50	-30...+60	-30...+50	-30...+60	-30...+50	-30...+60	-30...+50	-30...+60	-30...+50	-30...+60	-30...+50
Protection rating	IPX4		IPX4		IPX4		IPX4		IPX4		IPX4		IPX4	
Protection rating	IP24		IP24		IP24		IP24		IP24		IP24		IP24	

	OV / OVK / VKF 4E 450		**OV / OVK / VKF 6E 450**		**OV / OVK / VKF 4E 500**		**OV / OVK / VKF 6E 500**		**OV / OVK / VKF 4E 550**		**OV / OVK / VKF 6E 550**		**OV / OVK / VKF 4E 630**		**OV / OVK / VKF 6E 630**	
Voltage [V]	1 ~ 230		1 ~ 230		1 ~ 230		1 ~ 230		1 ~ 230		1 ~ 230		1 ~ 230		1 ~ 230	
Frequency [Hz]	50	60	50	60	50	60	50	60	50	60	50	60	50	60	50	60
Power [W]	250	325	151	161	420	455	220	268	550	654	330	375	750	979	540	610
Current [A]	1.2	1.46	0.78	0.8	1.95	2.05	1.1	1.22	2.55	2.88	1.6	1.63	3.5	4.26	2.4	2.74
Max. air flow [m³/h]	4680 (1300)	4790 (1331)	3200 (889)	3250 (903)	7060 (1961)	7130 (1981)	4880 (1356)	5380 (1495)	8800 (2445)	8970 (2492)	6400 (1778)	6520 (1811)	11900 (3306)	12100 (3361)	10900 (3028)	10990 (3053)
RPM [min^{-1}]	1350	1600	945	1115	1300	1630	945	1105	1300	1580	950	1060	1360	1625	850	1075
Noise level at 3 m [dBA]	56	57	52	52	58	59	56	56	62	63	58	58	67	68	59	59
Transported air temperature [°C]	-30...+60	-30...+50	-30...+60	-30...+50	-30...+60	-30...+50	-30...+60	-30...+50	-30...+60	-30...+50	-30...+60	-30...+50	-30...+60	-30...+50	-30...+60	-30...+50
Protection rating	IPX4		IPX4		IPX4		IPX4		IPX4		IPX4		IPX4		IPX4	
Protection rating	IP24		IP24		IP24		IP24		IP24		IP24		IP24		IP24	

	OV / OVK / VKF 2D 250		**OV / OVK / VKF 4D 250**		**OV / OVK / VKF 2D 300**		**OV / OVK / VKF 4D 300**		**OV / OVK / VKF 4D 350**		**OV / OVK / VKF 4D 400**		**OV / OVK / VKF 4D 450**		**OV / OVK / VKF 6D 450**	
Voltage [V]	3 ~ 400		3 ~ 400		3 ~ 400		3 ~ 400		3 ~ 400		3 ~ 400		3 ~ 400		3 ~ 400	
Frequency [Hz]	50	60	50	60	50	60	50	60	50	60	50	60	50	60	50	60
Power [W]	80	92	60	89	145	165	75	94	140	150	180	195	250	275	148	175
Current [A]	0.22	0.24	0.17	0.22	0.25	0.29	0.22	0.25	0.38	0.41	0.47	0.55	0.6	0.65	0.42	0,47
Max. air flow [m³/h]	1060 (294)	1150 (319)	850 (236)	885 (246)	2310 (642)	2390 (664)	1310 (364)	1530 (425)	2520 (700)	2590 (720)	3740 (1039)	3870 (1075)	5280 (1467)	5350 (1486)	3500 (972)	3580 (995)
RPM [min^{-1}]	2600	3030	1400	1750	2350	2570	1380	1640	1380	1640	1380	1625	1360	1620	900	1050
Noise level at 3 m [dBA]	51	52	38	38	52	52	45	45	46	46	54	54	56	56	53	53
Transported air temperature [°C]	-30...+60	-30...+50	-30...+60	-30...+50	-30...+60	-30...+50	-30...+60	-30...+50	-30...+60	-30...+50	-30...+60	-30...+50	-30...+60	-30...+50	-30...+60	-30...+50
Protection rating	IPX4		IPX4		IPX4		IPX4		IPX4		IPX4		IPX4		IPX4	
Protection rating	IP44		IP44		IP44		IP44		IP44		IP44		IP44		IP24	

	OV / OVK / VKF 4D 500		**OV / OVK / VKF 6D 500**		**OV / OVK / VKF 4D 550**		**OV / OVK / VKF 6D 550**		**OV / OVK / VKF 4D 630**		**OV / OVK / VKF 6D 630**		**OV / OVK / VKF 6D 710**	**OV / OVK / VKF 8D 710**	**OV / OVK / VKF 6D 800**	**OV / OVK / VKF 8D 800**
Voltage [V]	3 ~ 400		3 ~ 400		3 ~ 400		3 ~ 400		3 ~ 400		3 ~ 400		3 ~ 400	3 ~ 400	3 ~ 400	3 ~ 400
Frequency [Hz]	50	60	50	60	50	60	50	60	50	60	50	60	50	50	50	50
Power [W]	450	370	230	281	750	600	337	447	800	910	550	716	1150	700	1850	700
Current [A]	0.9	0.7	0.58	0.59	1.5	1.1	0.9	0.95	1.6	1.68	1.45	1.56	2.0	1.5	3.7	1.7
Max. air flow [m³/h]	6570 (1825)	6230 (1731)	4900 (1361)	5430 (1508)	9700 (2695)	7380 (2050)	6400 (1778)	6520 (1811)	12200 (3389)	12400 (3445)	1950 (542)	11120 (3089)	15440 (4289)	12000 (3334)	25000 (6945)	15550 (4320)
RPM [min^{-1}]	1300	1605	920	1015	1350	1605	910	1020	1320	1585	900	1060	830	710	915	710
Noise level at 3 m [dBA]	60	60	57	57	64	64	61	61	69	69	59	59	63	61	67	66
Transported air temperature [°C]	-30..+60	-30..+50	-30..+60	-30..+50	-30..+60	-30..+50	-30..+60	-30..+50	-30..+60	-30..+50	-30..+60	-30..+50	-30...+60	-30...+60	-30...+60	-30...+60
Protection rating	IPX4		IPX4		IPX4		IPX4		IPX4		IPX4		IPX4	IPX4	IPX4	IPX4
Protection rating	IP24		IP24		IP24		IP24		IP24		IP24		IP44	IP44	IP44	IP44

	OV1 / OVK1 / VKOM 150		**OV1 / OVK1 / VKOM 200**		**OV1 / OVK1 / VKOM 250**		**OV1 / OVK1 / VKOM 315**	
Voltage [V]	1 ~ 230		1 ~ 230		1 ~ 230		1 ~ 230	
Frequency [Hz]	50	60	50	60	50	60	50	60
Power [W]	36	26	43	33	68	76	110	104
Current [A]	0.26	0.26	0.28	0.21	0.48	0.51	0.75	0.7
Max. air flow [m³/h]	200 (56)	205 (57)	405 (113)	470 (131)	1070 (297)	1050 (292)	1700 (472)	1650 (458)
RPM [min^{-1}]	1300	1590	1300	1615	1300	1450	1300	1365
Noise level at 3 m [dBA]	33	34	32	31	48	48	54	54
Transported air temperature [°C]	+40	+40	+40	+40	+40	+40	+40	+40
Protection rating	IPX4		IPX4		IPX4		IPX4	
Protection rating	IP44		IP44		IP44		IP44	

	OVP 2E 200	**OVP 2E 250**	**OVP 4E 250**	**OVP 2E 300**	**OVP 4E 300**	**OVP 4E 350**
Voltage [V/50 Hz]	1-230	1-230	1-230	1-230	1-230	1-230
Power [W]	55	80	50	145	75	140
Current [A]	0.26	0.4	0.22	0.66	0.35	0.65
Max. air flow [m³/h]	860	1050	800	2230	1340	2500
RPM [min^{-1}]	2300	2400	1380	2300	1350	1380
Noise level at 3 m [dBA]	50	60	55	60	58	62
Transported air temperature [°C]	-30...+60	-30...+60	-30...+60	-30...+60	-30...+60	-30...+60
Protection rating	IPX4	IPX4	IPX4	IP X4	IPX4	IPX4

Model	Dimensions [mm]					Weight [kg]
	Ø D	Ø d	B	B1	L	
OV 200 2E	210	7	312	260	125	3.0
OV 2E 250 / OV 2D 250	260	7	370	320	135	4.0
OV 4E 250 / OV 4D 250	260	7	370	320	135	3.5
OV 4E 300 / OV 4D 300	317	9	430	380	145	6.1 / 5.4
OV 4E 300 / OV 4D 300	317	9	430	380	145	5.0 / 5.4
OV 4E 350 / OV 4D 350	374	9	485	435	165	7.8
OV 4E 400 / OV 4D 400	416	9	540	490	220	8.8
OV 4E 450 / OV 4D 450 OV 6E 450 / OV 6D 450	465	11	576	535	230	10.5
OV 4E 500 / OV 4D 500 OV 6E 500 / OV 6D 500	520	11	655	615	250	14.0
OV 4E 550 / OV 4D 550 OV 6E 550 / OV 6D 550	570	11	725	675	260	16.5
OV 4E 630 / OV 4D 630 OV 6E 630 / OV 6D 630	650	11	800	710	275	20.0
OV 6D 710 / OV 8D 710	725	13	900	810	350	33.0
OV 6D 800 / OV 8D 800	800	13	970	910	350	44.0

OV

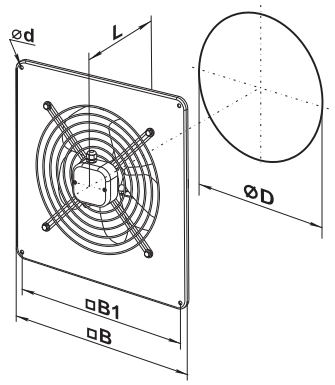

Model	Dimensions [mm]					Weight [kg]
	Ø D	Ø D1	Ø D2	Ø d	L	
OVK 200 2E	210	250	280	7	125	2.8
OVK 2E 250 / OVK 2D 250	260	295	340	7	135	3.8
OVK 4E 250 / OVK 4D 250	260	295	340	7	135	3.4
OVK 2E 300 / OVK 2D 300	317	380	397	9	145	5.9 / 5.1
OVK 4E 300 / OVK 4D 300	317	380	397	9	145	5.0 / 5.1
OVK 4E 350 / OVK 4D 350	374	442	460	9	165	7.5
OVK 4E 400 / OVK 4D 400	417	504	528	9	220	8.5
OVK 4E 450 / OVK 4D 450 OVK 6E 450 / OVK 6D 450	465	578	607	11	230	10.0
OVK 4E 500 / OVK 4D 500 OVK 6E 500 / OVK 6D 500	520	590	655	11	250	14.0
OVK 4E 550 / OVK 4D 550 OVK 6E 550 / OVK 6D 550	570	645	710	11	260	16.5
OVK 4E 630 / OVK 4D 630 OVK 6E 630 / OVK 6D 630	650	760	800	11	275	20.0
OVK 6D 710 / OVK 8D 710	725	820	890	13	350	31.0
OVK 6D 800 / OVK 8D 800	800	900	970	13	350	42.0

OVK

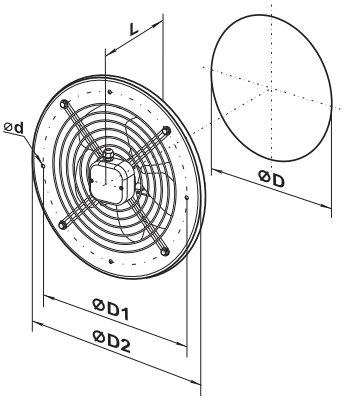

Model	Dimensions [mm]						Weight [kg]
	Ø D	Ø D1	Ø D2	Ø d	B	L	
VKF 2E 200	205	235	255	7	290	120	3.0
VKF 2E 250/VKF 2D 250	260	286	306	7	340	150	3.9
VKF 4E 250/VKF 4D 250	260	286	306	7	340	150	4.0
VKF 2E 300/VKF 2D 300	310	356	382	7	410	160	6.2 / 5.7
VKF 4E 300/VKF 4D 300	310	356	382	7	410	160	6.2
VKF 4E 350/VKF 4D 350	362	395	421	9.5	450	160	7.7
VKF 4E 400/VKF 4D 400	412	438	465	9.5	500	170	8.1
VKF 4E 450/VKF 4D 450 VKF 6E 450/VKF 6D 450	462	487	515	9.5	550	200	9.1
VKF 4E 500/VKF 4D 500 VKF 6E 500/VKF 6D 500	515	541	570	9.5	600	220	11.0
VKF 4E 550/VKF 4D 550 VKF 6E 550/VKF 6D 550	565	605	636	11.5	660	230	13.9
VKF 4E 630/VKF 4D 630 VKF 6E 630/VKF 6D 630	645	674	715	11.5	740	250	16.4
VKF 6D 710/VKF 8D 710	725	767	805	11.5	835	250	30.0
VKF 6D 800/VKF 8D 800	800	845	880	11.5	910	280	40.0

VKF

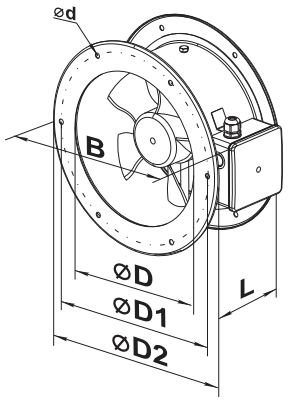

Model	Dimensions [mm]					Weight [kg]
	Ø D	Ø d	B	B1	L	
OV1 150	162	7	250	210	120	2.5
OV1 200	208	7	312	260	120	3.0
OV1 250	262	7	370	320	140	3.5
OV1 315	312	9	430	380	170	6.1

OV1

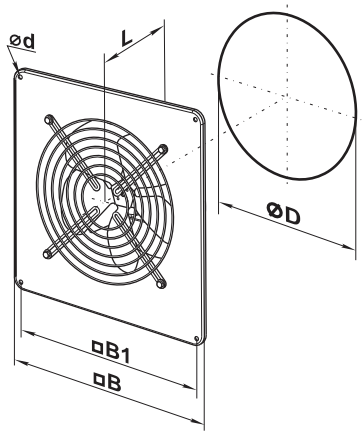

Model	Dimensions [mm]					Weight [kg]
	Ø D	Ø D1	Ø D2	Ø d	L	
OVK1 150	162	190	220	7	120	2.5
OVK1 200	208	270	300	7	120	2.5
OVK1 250	262	330	360	7	140	3.0
OVK1 315	312	390	420	9	170	5.1

OVK1

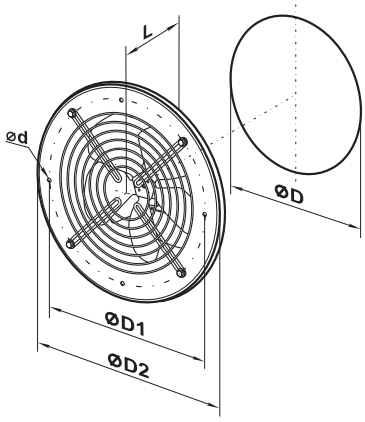

OVP

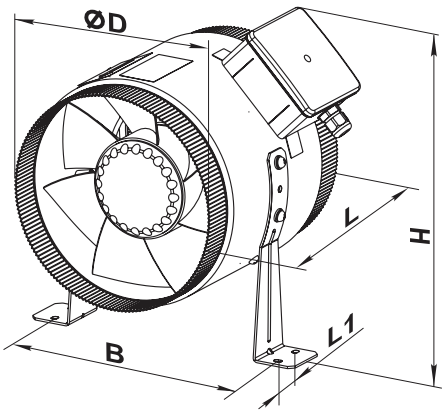

Model	Dimensions [mm]					Weight [kg]
	Ø D	B	L	H	L1	
OVP 2E 200	199	227	220	300	30	3.5
OVP 2E 250	249	282	250	320	30	4.5
OVP 4E 250	249	282	250	320	30	4.5
OVP 2E 300	299	326	250	390	40	6.3
OVP 4E 300	299	326	250	390	40	6.3
OVP 4E 350	349	378	300	410	40	8.4

VKOM

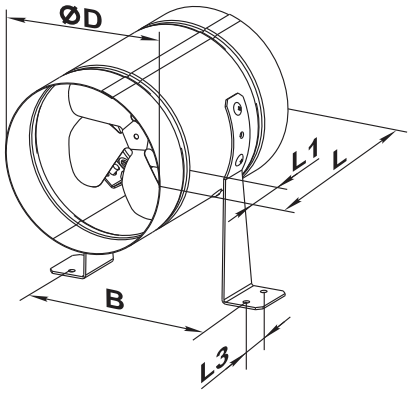

Model	Dimensions [mm]					Weight [kg]
	Ø D	B	L	L1	L3	
VKOM 150	162	183	220	40	30	1.8
VKOM 200	208	228	220	40	30	2.4
VKOM 250	262	283	270	55	30	3.7
VKOM 315	315	337	278	55	40	4.9

RSM(z)

The **VKOM** fans are equipped with **RSM(z)** (polymer-coated steel, galvanised steel) reducers for connection to 150 mm, 200 mm and 250 mm air ducts. The reducers are not included in the delivery set and must be ordered separately.

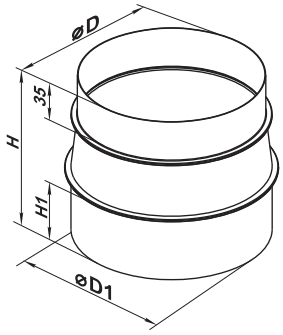

Model	Dimensions [mm]				Weight [kg]
	Ø D	Ø D1	H	H1	
RSM(z) 148/158	148	158	140	55	0.3
RSM(z) 198/204	198	204	140	55	0.4
RSM(z) 248/258	248	258	150	65	0.42

OV1 R

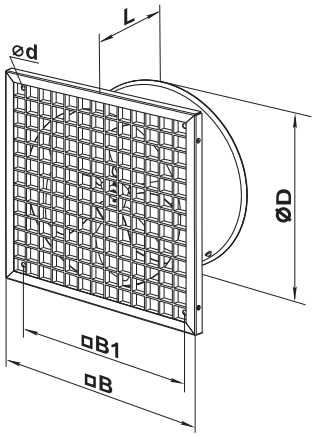

Model	Dimensions [mm]					Weight [kg]
	Ø D	Ø d	B	B1	L	
OV1 150 R	162	7	325	275	127	2.5
OV1 200 R	208	7	325	275	127	3.0
OV1 250 R	262	7	325	275	152	3.5

UNIT DESIGN AND OPERATING PRINCIPLE

The **OV** and **OVK** fans consist of a casing 1 with a square or a round flange with a grille fixed with bolts 4 and complete with an electric motor and impeller 5. The impeller rotation direction depends on the type of electric motor and external rotor used. The bolts attaching the impeller to the grille also serve as attachment bolts for the terminal box 3. Some models may be equipped with a cable with a terminal box for remote connection. The casing has an M4 threaded hole and yellow-green cables for connection to the protective ground circuit.

OV

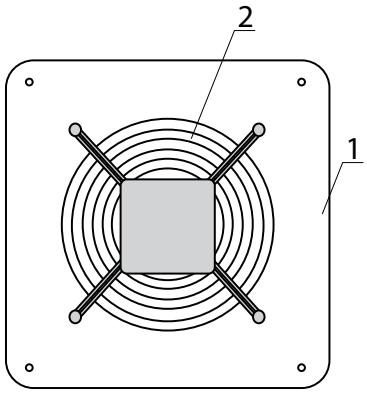

OVK

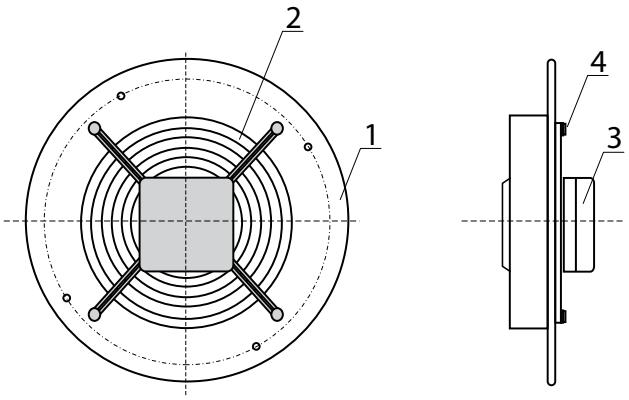

The **OV1** and **OVK1** fans consist of a casing 1 made of polymer-coated stainless steel with a square (**OV1**) or round (**OVK1**) flange, to which the grille 2 is fastened with bolts 4. The motor and impeller 5 are mounted on a bracket inside the casing. The fans are equipped with a terminal box with a cable for remote connection.

OV1

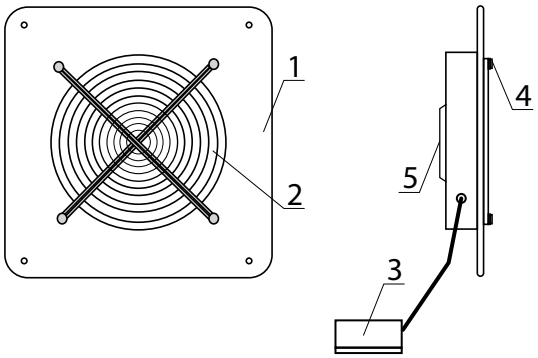

OVK1

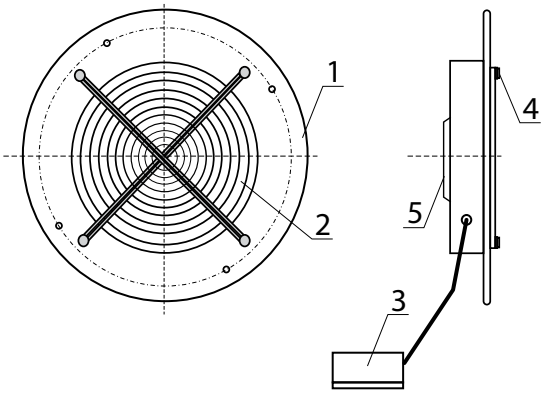

The **VKF** fan consists of a casing 1 with round flanges on both sides providing connection for a cross piece complete with an electric motor and impeller 4 fixed with bolts 3. The impeller rotation direction depends on the type of electric motor used. The electric motor casing has an M4 threaded hole and yellow-green cables for connection to the protective ground circuit.

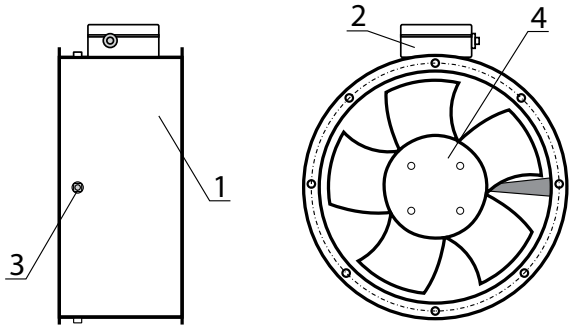

OVP and VKOM

The brackets 2 are attached to the casing with bolts 1. The electric motor with the impeller 4 is mounted on the bracket 3 inside the casing. The terminal box 5 mounted onto the **OVP** fan casing provides connection to power mains.

OVP

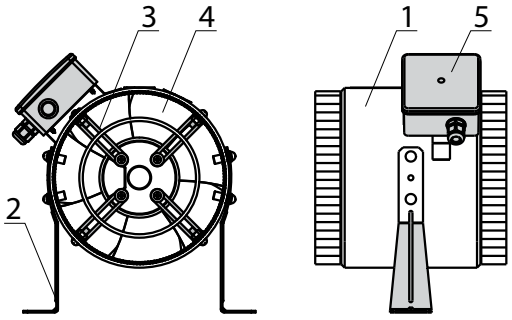

VKOM

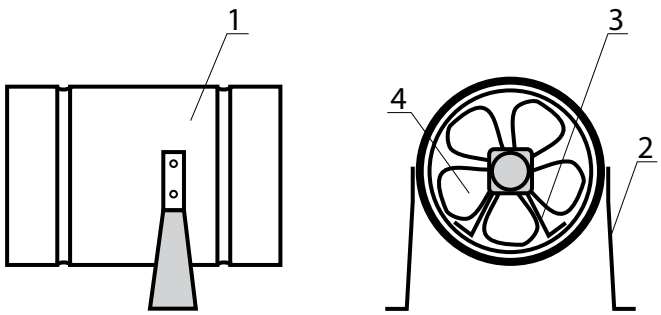

The **OV1 R** fan consists of a steel casing 1 with a square flange. The casing has a polymer coating. The motor and impeller 5 are mounted on a bracket inside the casing. The plastic grille 2 is mounted inside the casing 1 and secured with a frame 3. The fans are equipped with a terminal box 4 on a cable for electrical connection.

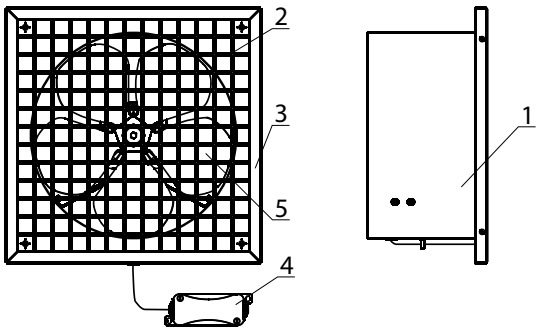

MOUNTING AND SET-UP

BEFORE MOUNTING MAKE SURE THE CASING DOES NOT CONTAIN ANY FOREIGN OBJECTS (E.G. FOIL, PAPER).

WHILE INSTALLING THE UNIT ENSURE CONVENIENT ACCESS FOR SUBSEQUENT MAINTENANCE AND REPAIR.

- Unpack the fan and check for any cuts in the electric wires and cracks in the insulation. Inspect the fan casing to make sure it is free from any cracks and deformations. Set the impeller in motion and check that it rotates freely without catching against the inlet flange and the casing.
- Prior to powering up the fan make sure that the mains parameters comply with the technical specifications on the fan label attached to the protective casing.
- The fan mounting locations must enable adequate access for maintenance, technical service and replacement operations.
- When the service conditions may lead to water ingress, the fans must be equipped with adequate protection. For example, the fans may be installed under a canopy or a roof.
- Since the fan belongs to Class 1 in terms of electrical hazard protection proper grounding is a must: to ground the equipment, connect the ⏚ terminal to the protective ground circuit.

The fans are installed on wall surfaces by means of a mounting casing with attachment holes:

- **OV**, **OV1**, **OV1 R** series with a square casing — 4 holes.
- **OVK**, **OVK1** series with a round casing — 6 holes.

OV fan installation

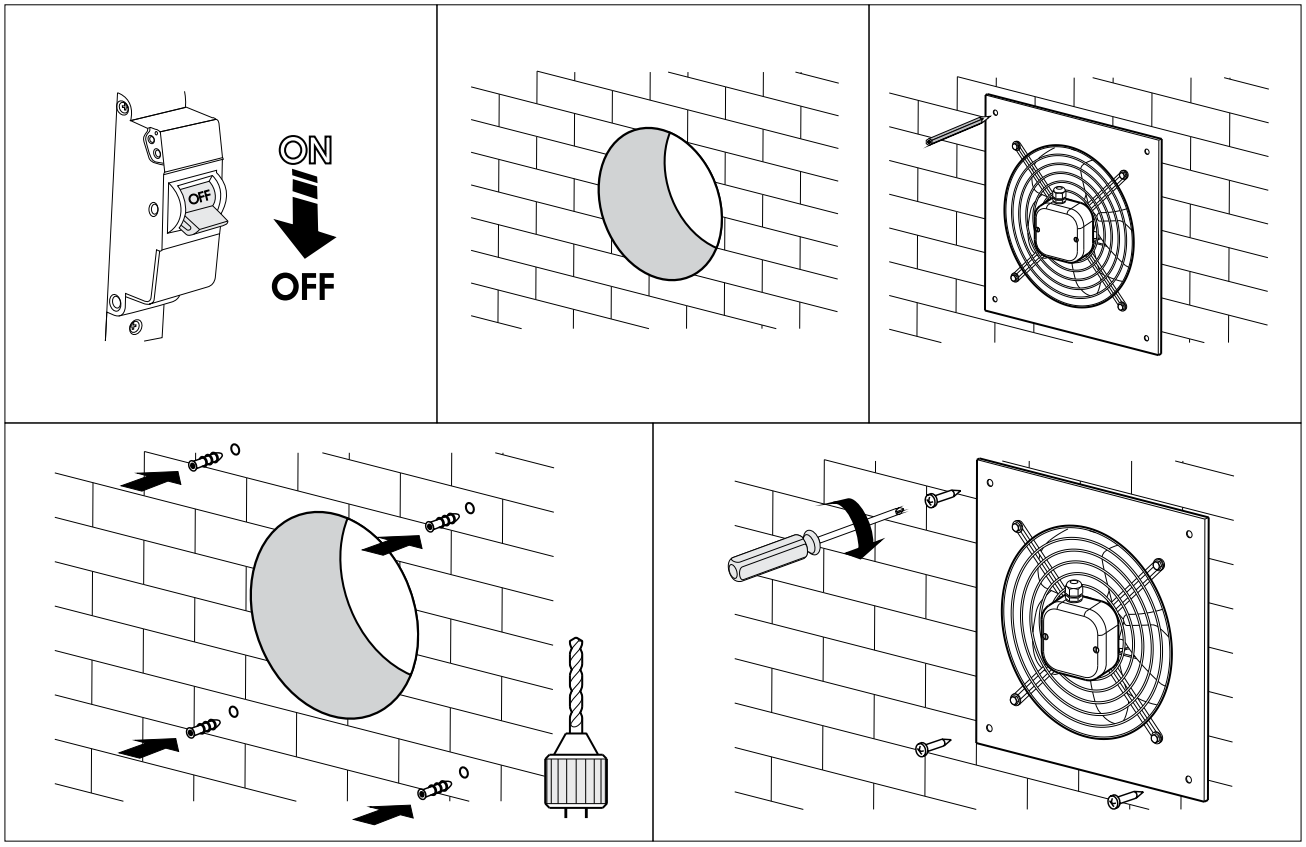

OV1 and OVK1 fan installation

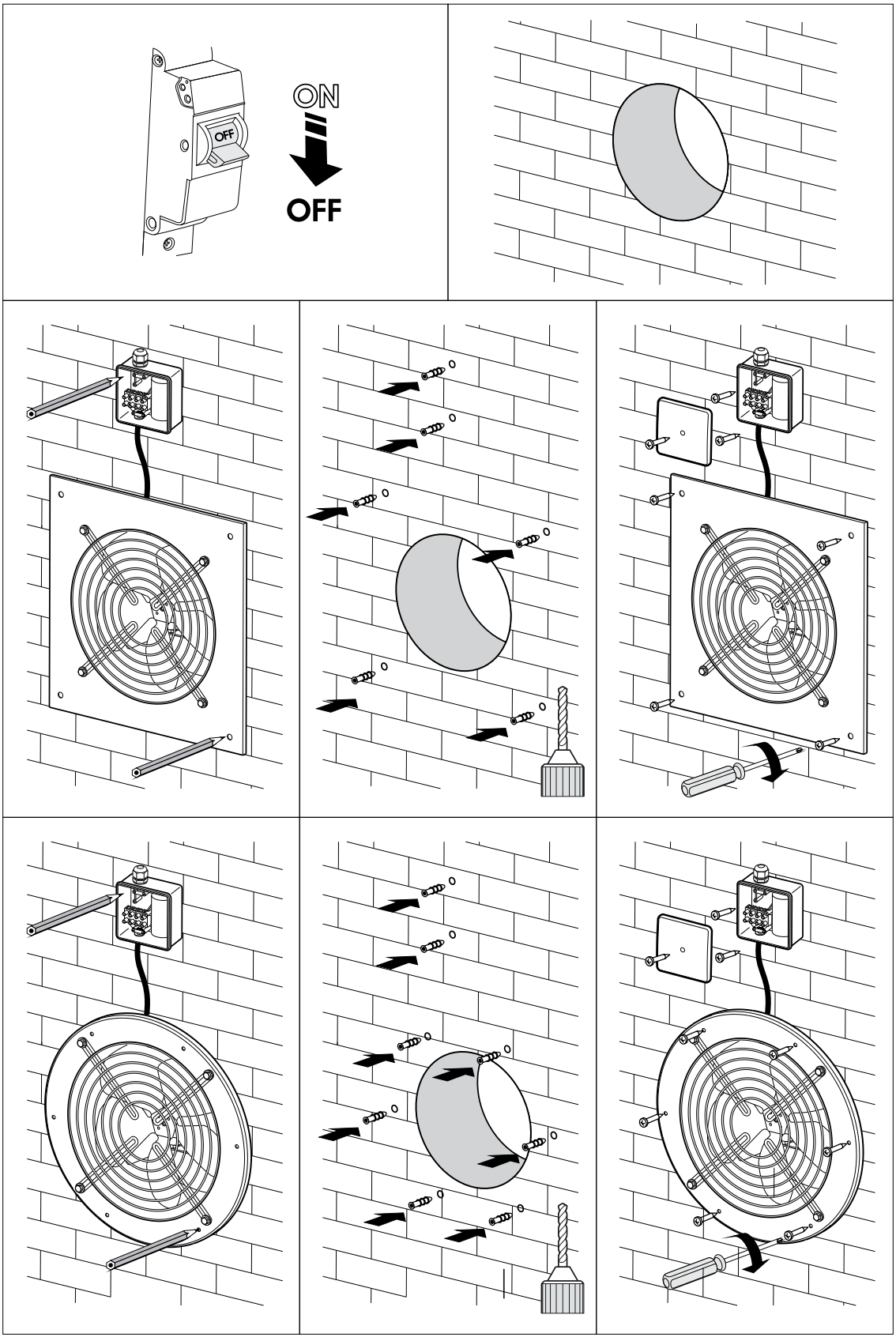

OVK fan installation

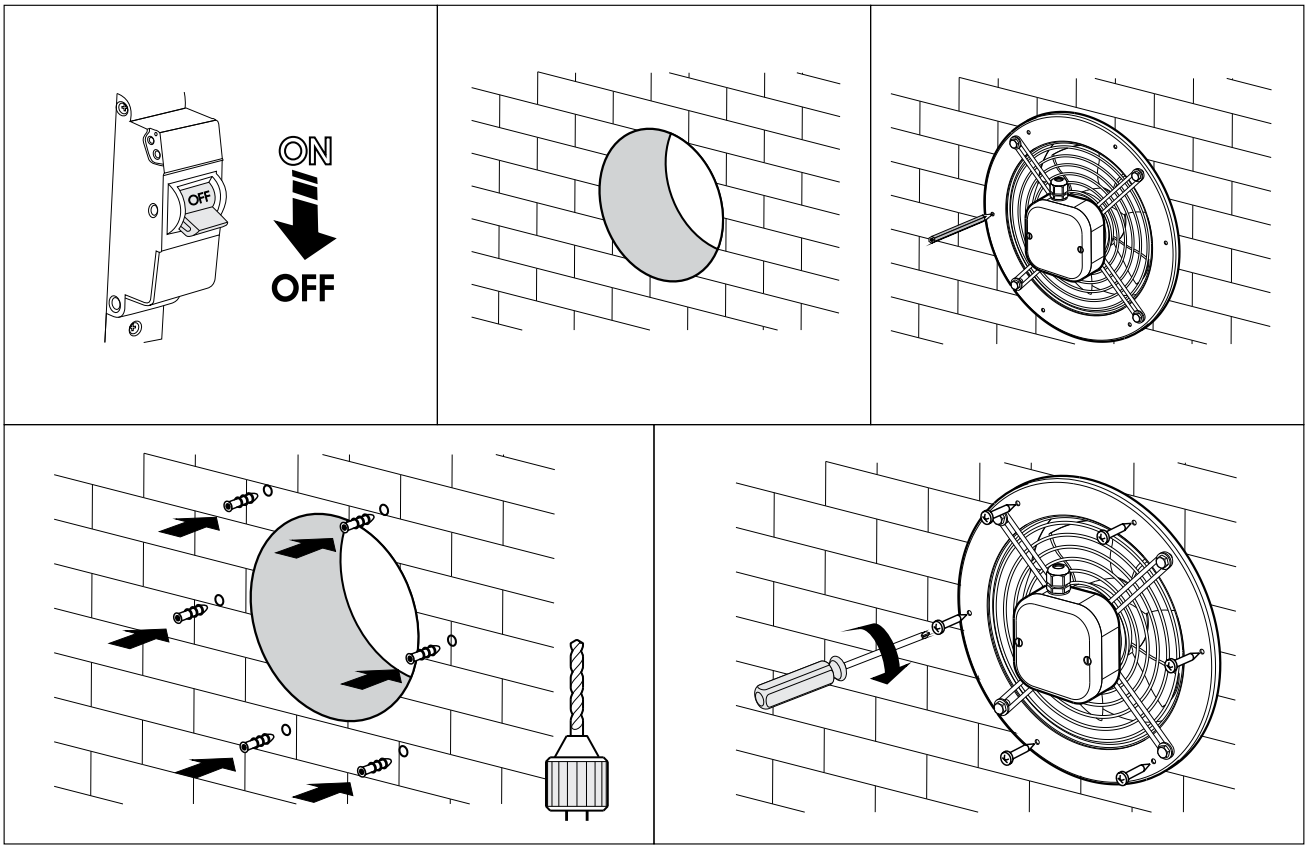

VKF fan installation

The fans are installed into air ducts by means of connection flanges. The fans must be installed in such a way so that the direction of the arrow shown on the casing matches the direction of air flow in the system. The power is supplied via the remote-position terminal box.

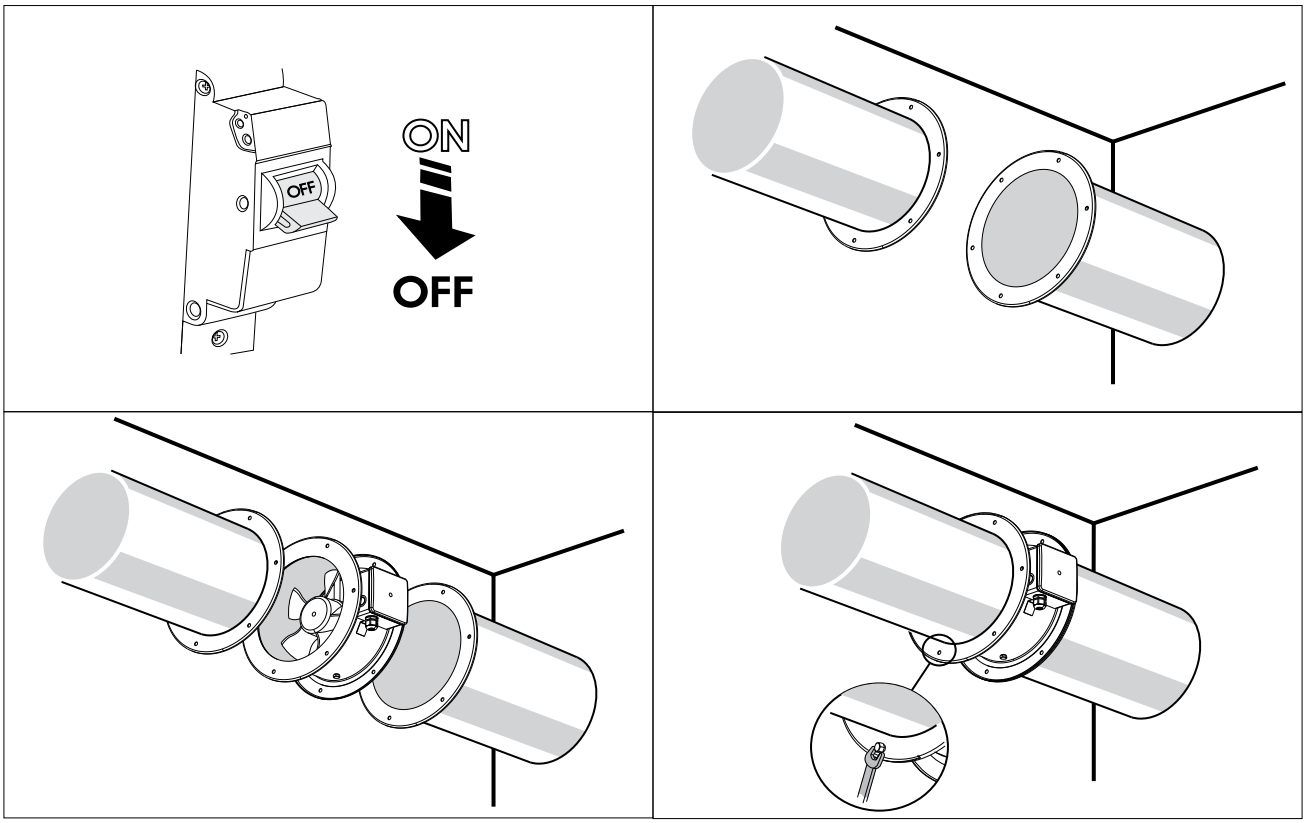

OVP fan installation

The fans are installed into air ducts by means of clamps. The delivery set includes mounting brackets for attaching the units to the ceiling or a wall. The power is supplied via an external terminal box mounted to the fan casing.

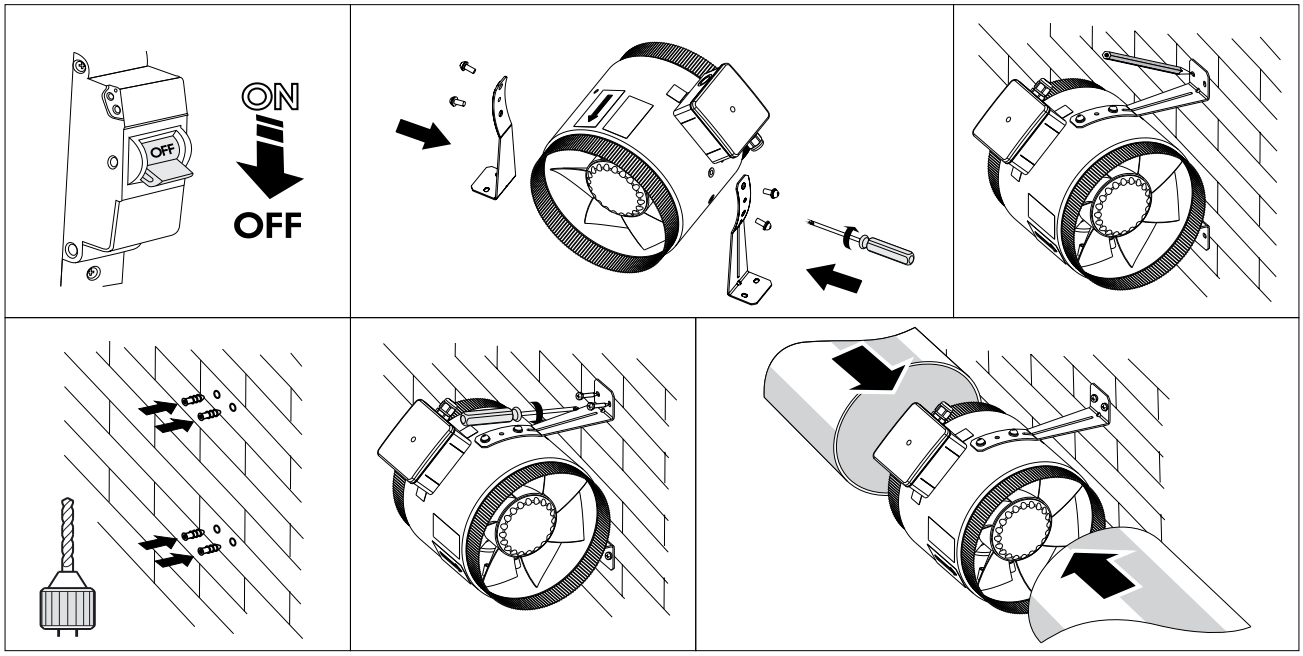

VKOM fan installation

The fans are installed into air duct by means of an **RSM(z)** reducer which enables joining different diameter ducts. Once done, the assembly is secured with clamps. The **VKOM** delivery package includes mounting brackets for attaching the units to a wall. The power is supplied via the remote-position terminal box.

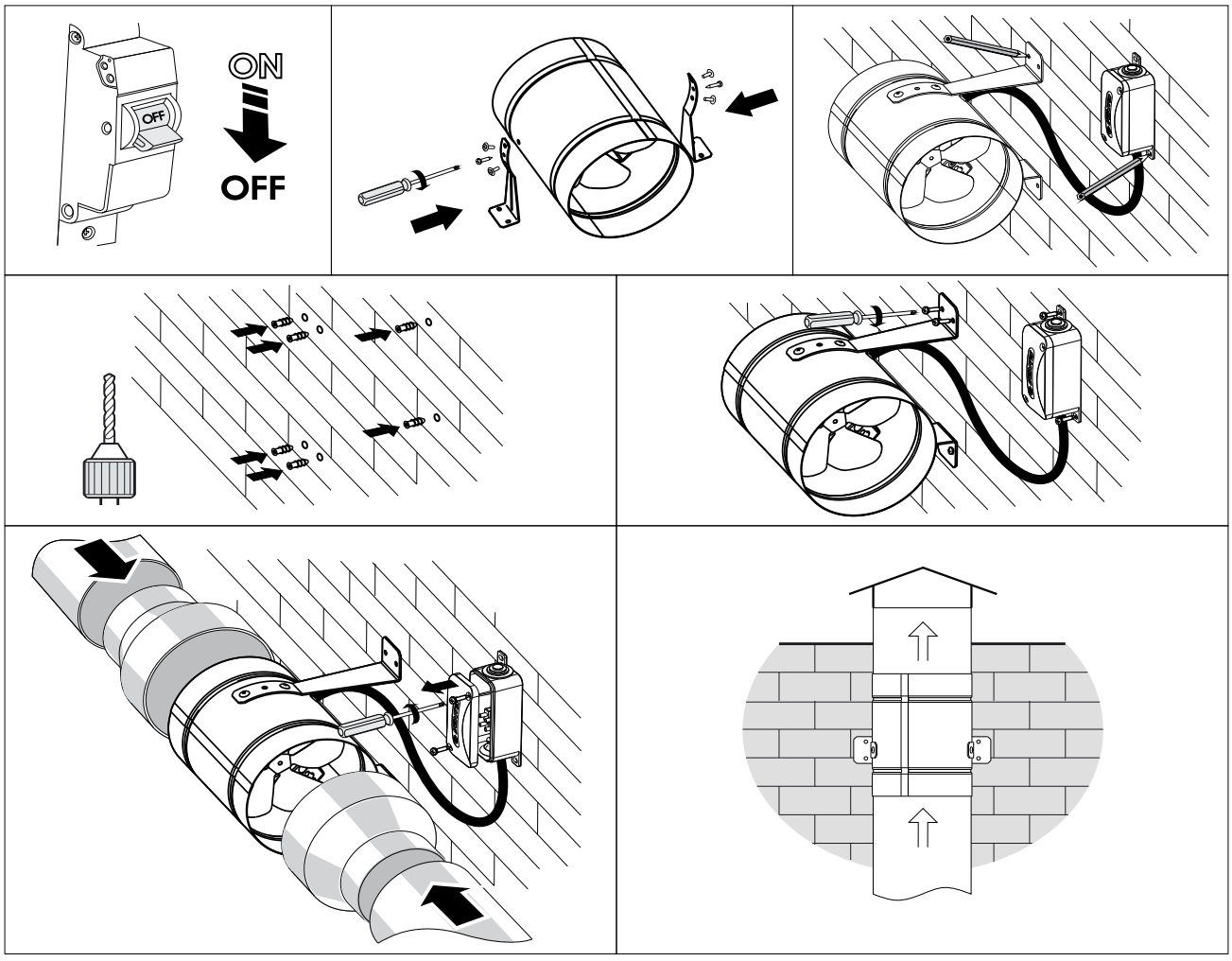

OV1 R fan installation

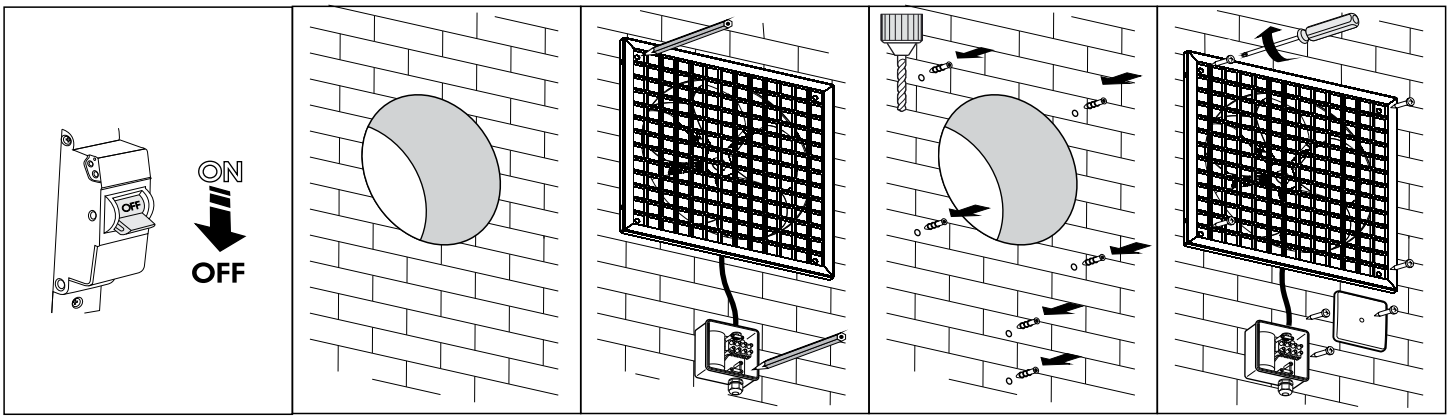

CONNECTION TO POWER MAINS

DISCONNECT THE POWER SUPPLY PRIOR TO ANY OPERATIONS WITH THE UNIT.

CONNECTION OF THE UNIT TO POWER MAINS IS ALLOWED BY A QUALIFIED ELECTRICIAN WITH A WORK PERMIT FOR THE ELECTRIC UNITS UP TO 1000 V AFTER CAREFUL READING OF THE PRESENT USER'S MANUAL. THE RATED ELECTRICAL PARAMETERS OF THE UNIT ARE GIVEN ON THE MANUFACTURER'S LABEL.

- The unit is rated for connection to 1~230 V/50 Hz or 3~400 V/50 (60) Hz power mains.
- The unit must be connected to power mains using insulated electric conductors (cables, wires). The actual wire cross section selection must be based on the maximum load current, maximum conductor temperature depending on the wire type, insulation, length and installation method.
- The external power input must be equipped with an automatic circuit breaker built into the stationary wiring to open the electric circuit in case of overload or short-circuit. The circuit breaker installation place must provide quick access for emergency shutdown of the unit. The trip current of the automatic circuit breaker **QF** must exceed the maximum current consumption of the unit (refer to the technical data table). The recommended trip current of the circuit breaker is the next current in the standard trip current row following the maximum current of the connected unit. The automatic circuit breaker is not included in the delivery set.

Connection of OV, OVK, VKF, OVP fans with single-phase motor

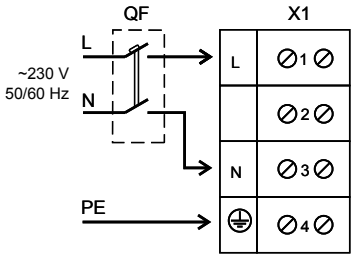

Connection of OV, OVK, VKF fans with three-phase motor

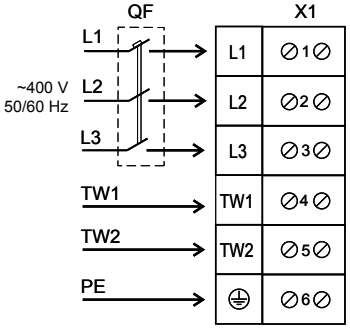

Connection of OV1, OVK1, VKOM fans with single-phase motor

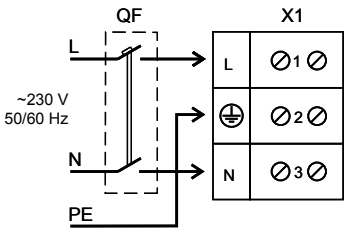

OV and OVK fan connection

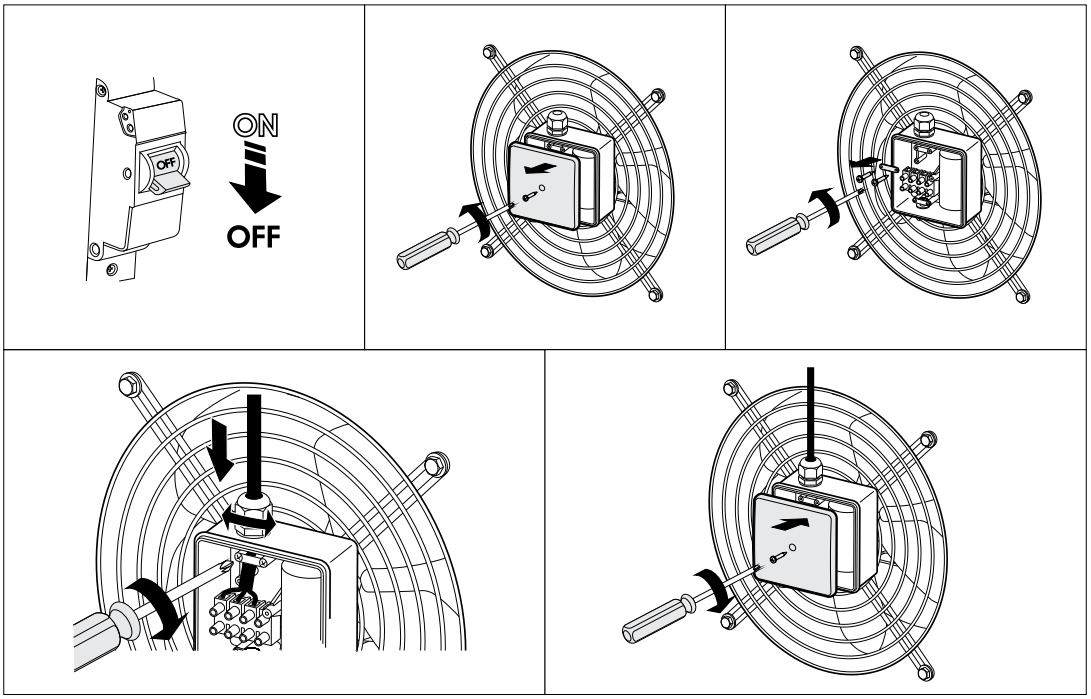

OV1 fan connection

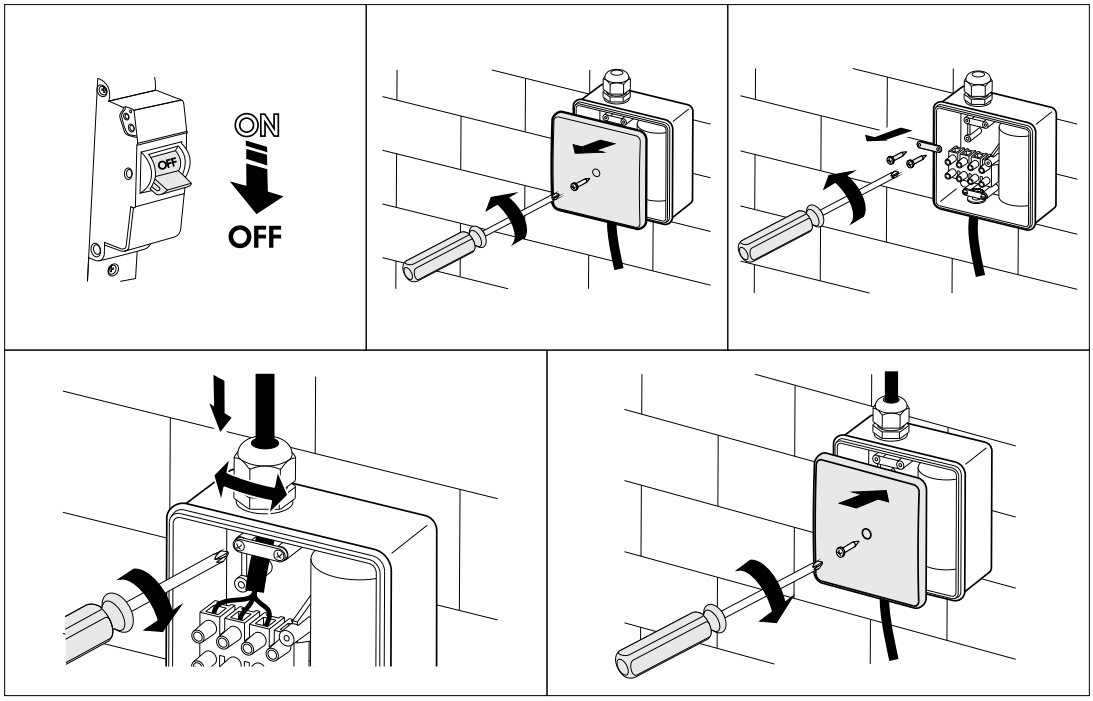

VKF and VKOM fan connection

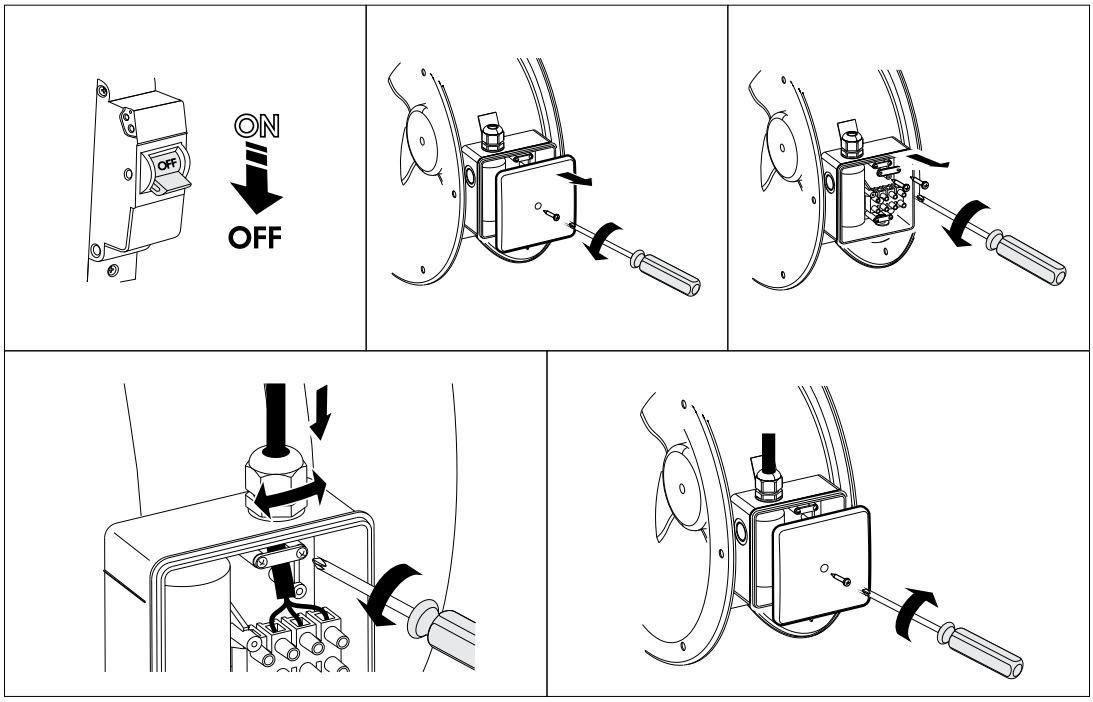

OVP fan connection

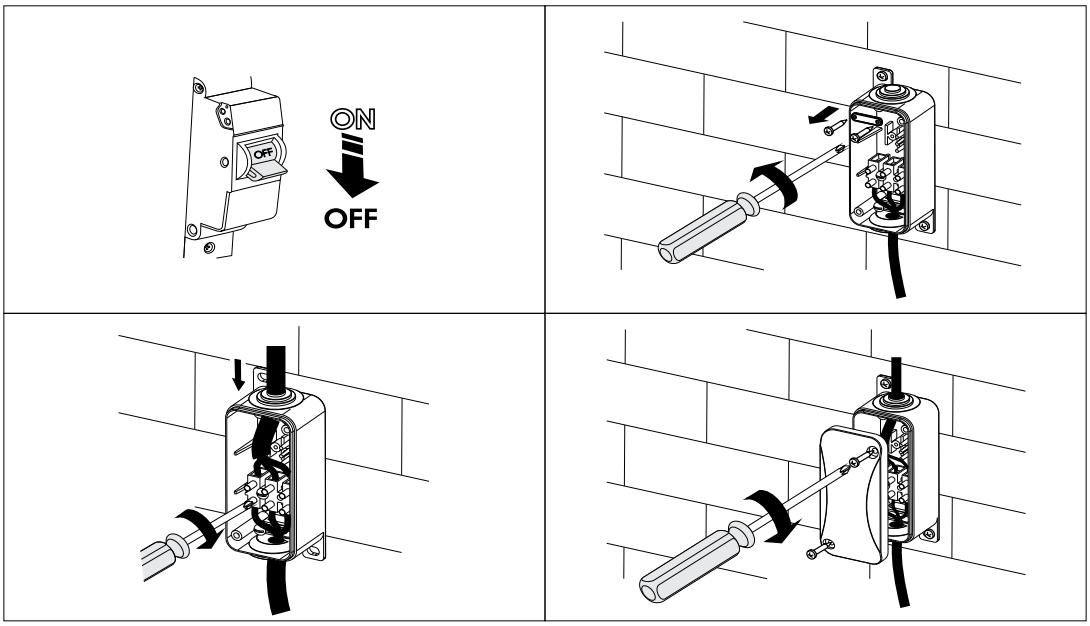

TECHNICAL MAINTENANCE

DISCONNECT THE UNIT FROM POWER SUPPLY BEFORE ANY MAINTENANCE OPERATIONS!

All the operations specific to the technical maintenance must be performed upon disconnecting the fan from power mains. The technical maintenance includes periodic cleaning of the fan surfaces from dust and dirt. To dust off the metal parts of the fan, use a dry soft brush or a stream of compressed air. Every 6 months clean the impeller with a warm detergent solution while avoiding water penetration onto the electric motor. Wipe the cleaned surfaces dry.

To carry out technical maintenance, remove the **VKF**, **VKOM** , **OVP** fans from the duct by undoing the retaining bolts on the **VKF** units or disconnecting the mounting clamps on the **VKOM** and **OVP** units. To carry out work on the **OV, OVK**, **OV1, OVK1**, **OV1 R** units, undo the bolt 4 and disconnect the grille and electric motor assembly from the casing.

OV and OVK technical maintenance

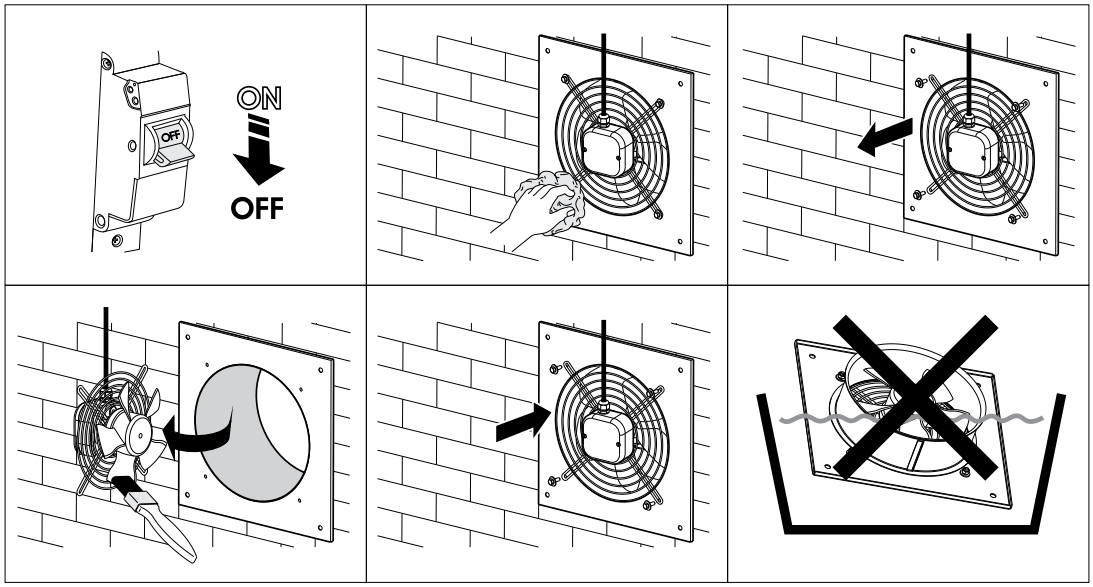

VKF technical maintenance

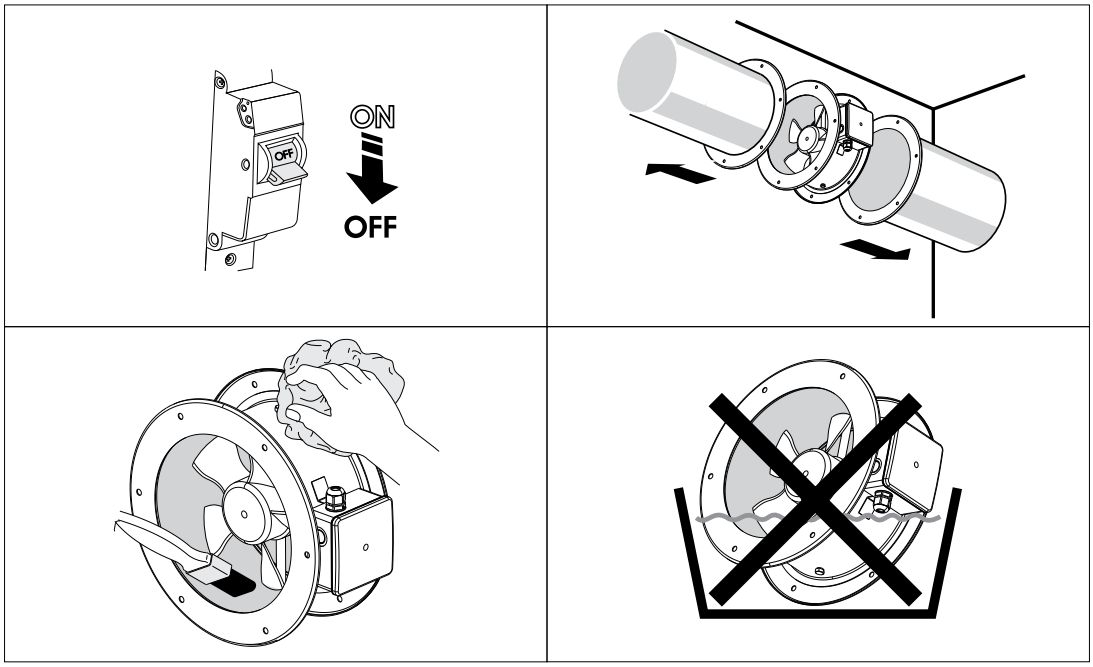

OV1 and OVK1 technical maintenance

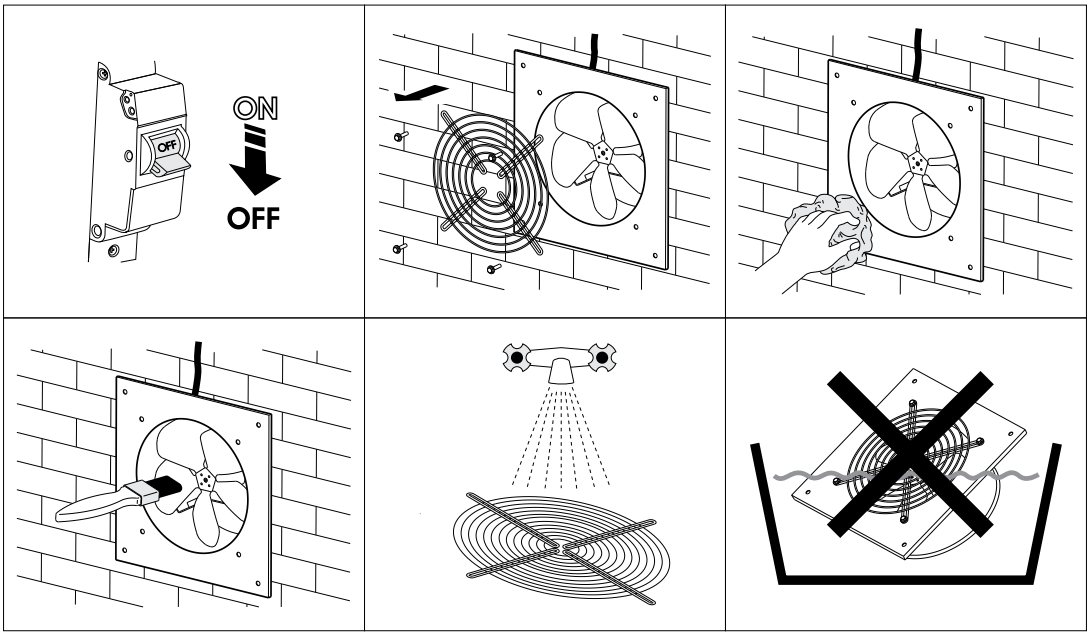

OVP and VKOM technical maintenance

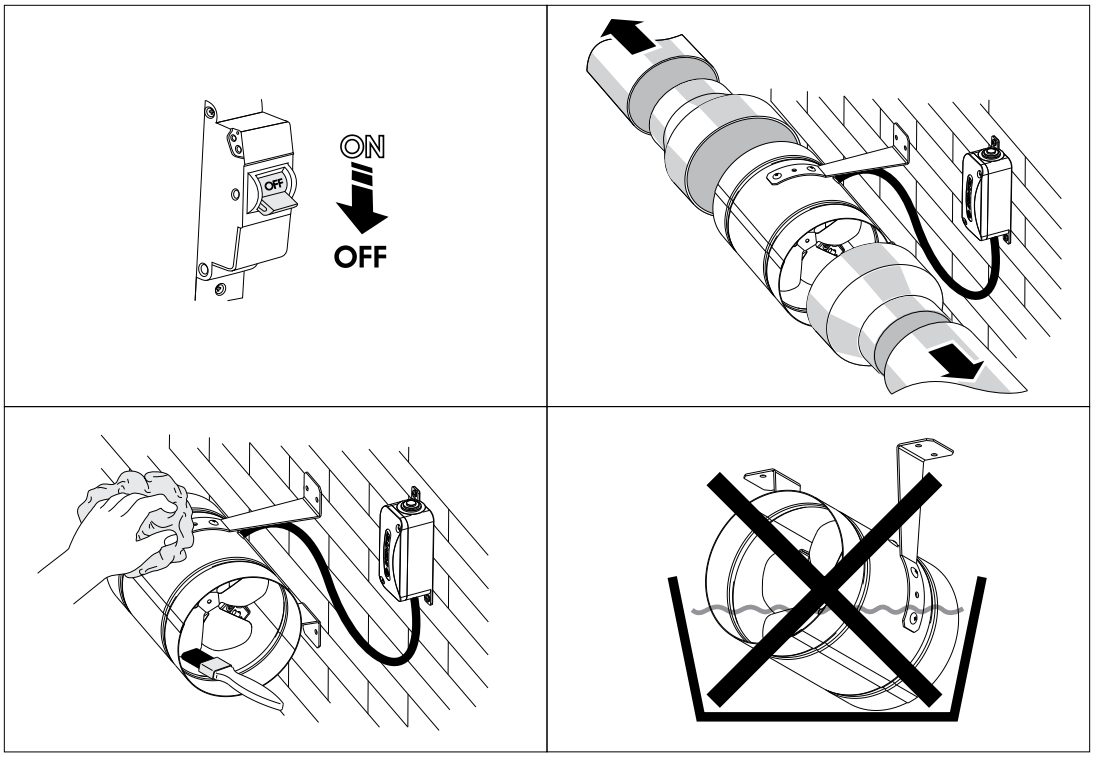

OV1 R technical maintenance

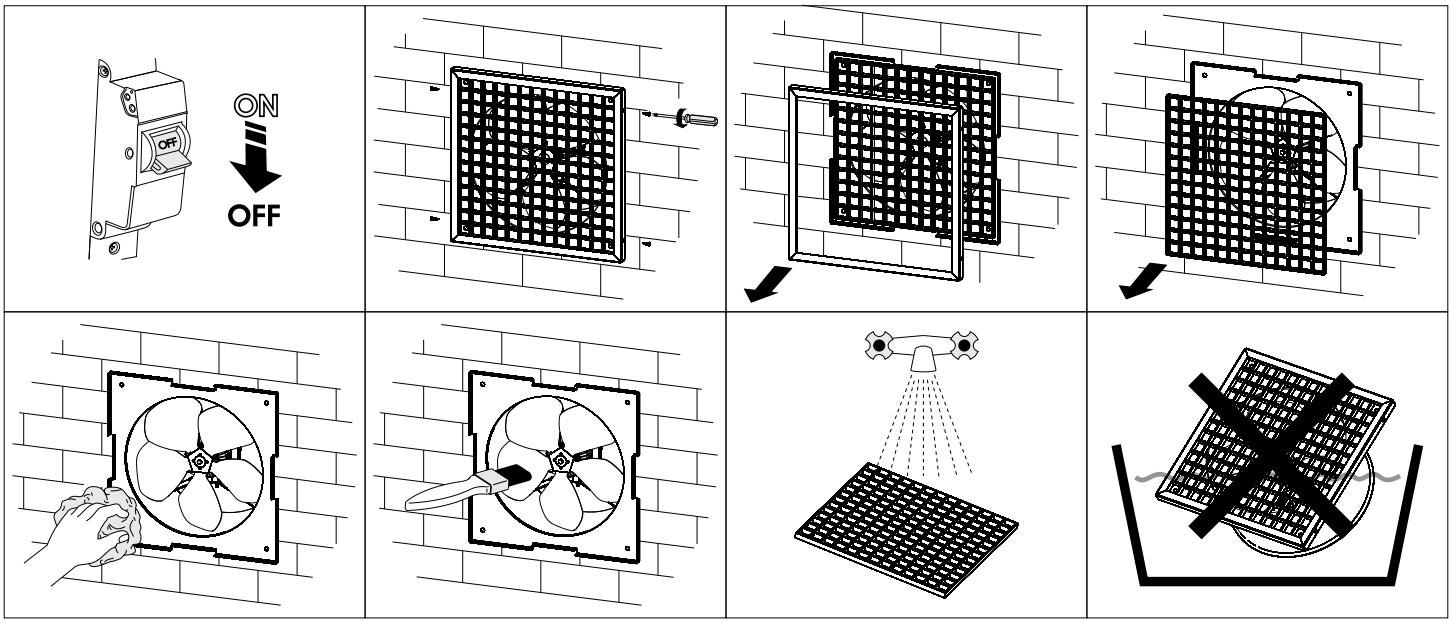

TROUBLESHOOTING

PROBLEM	POSSIBLE REASONS	TROUBLESHOOTING
The fan will not start on power-up.	No electric power.	Check the electrical connections and the power switch status.
	Motor jamming.	Switch off the fan. Eliminate the cause for the impeller clogging. Switch the fan back on.
The automatic breaker activates upon the unit power-up.	The automatic circuit breaker is triggered by abnormally high current consumption due to a short circuit.	Disconnect the fan from the power mains and contact the Seller. Do not switch on the fan again!
Low air flow.	Clogging of air ducts or other ventilation system elements due to contamination. Impeller contamination. Damaged air ducts. Closed air dampers.	Clean the air ducts and other ventilation system elements as well as the impeller. Check the air ducts for damage. Make sure that the air dampers and louvers are open.

If the malfunction is too complex to be eliminated on the spot, contact the fan Seller.

STORAGE AND TRANSPORTATION REGULATIONS

- Store the unit in the manufacturer's original packaging box in a dry closed ventilated premise with temperature range from +5 ˚C to +40 ˚C and relative humidity up to 70 %.
- Storage environment must not contain aggressive vapors and chemical mixtures provoking corrosion, insulation, and sealing deformation.
- Use suitable hoist machinery for handling and storage operations to prevent possible damage to the unit.
- Follow the handling requirements applicable for the particular type of cargo.
- The unit can be carried in the original packaging by any mode of transport provided proper protection against precipitation and mechanical damage. The unit must be transported only in the working position.
- Avoid sharp blows, scratches, or rough handling during loading and unloading.
- Prior to the initial power-up after transportation at low temperatures, allow the unit to warm up at operating temperature for at least 3-4 hours.

MANUFACTURER'S WARRANTY

The product is in compliance with EU norms and standards on low voltage guidelines and electromagnetic compatibility. We hereby declare that the product complies with the provisions of Electromagnetic Compatibility (EMC) Directive 2014/30/EU of the European Parliament and of the Council, Low Voltage Directive (LVD) 2014/35/EU of the European Parliament and of the Council and CE-marking Council Directive 93/68/EEC. This certificate is issued following test carried out on samples of the product referred to above.
The manufacturer hereby warrants normal operation of the unit for 24 months after the retail sale date provided the user's observance of the transportation, storage, installation, and operation regulations. Should any malfunctions occur in the course of the unit operation through the Manufacturer's fault during the guaranteed period of operation, the user is entitled to get all the faults eliminated by the manufacturer by means of warranty repair at the factory free of charge. The warranty repair includes work specific to elimination of faults in the unit operation to ensure its intended use by the user within the guaranteed period of operation. The faults are eliminated by means of replacement or repair of the unit components or a specific part of such unit component.

The warranty repair does not include:
- routine technical maintenance
- unit installation/dismantling
- unit setup

To benefit from warranty repair, the user must provide the unit, the user's manual with the purchase date stamp, and the payment paperwork certifying the purchase. The unit model must comply with the one stated in the user's manual. Contact the Seller for warranty service.

The manufacturer's warranty does not apply to the following cases:
- User's failure to submit the unit with the entire delivery package as stated in the user's manual including submission with missing component parts previously dismounted by the user.
- Mismatch of the unit model and the brand name with the information stated on the unit packaging and in the user's manual.
- User's failure to ensure timely technical maintenance of the unit.
- External damage to the unit casing (excluding external modifications as required for installation) and internal components caused by the user.
- Redesign or engineering changes to the unit.
- Replacement and use of any assemblies, parts and components not approved by the manufacturer.
- Unit misuse.
- Violation of the unit installation regulations by the user.
- Violation of the unit control regulations by the user.
- Unit connection to power mains with a voltage different from the one stated in the user's manual.
- Unit breakdown due to voltage surges in power mains.
- Discretionary repair of the unit by the user.
- Unit repair by any persons without the manufacturer's authorization.
- Expiration of the unit warranty period.
- Violation of the unit transportation regulations by the user.
- Violation of the unit storage regulations by the user.
- Wrongful actions against the unit committed by third parties.
- Unit breakdown due to circumstances of insuperable force (fire, flood, earthquake, war, hostilities of any kind, blockades).
- Missing seals if provided by the user's manual.
- Failure to submit the user's manual with the unit purchase date stamp.
- Missing payment paperwork certifying the unit purchase.

FOLLOWING THE REGULATIONS STIPULATED HEREIN WILL ENSURE A LONG AND TROUBLE-FREE OPERATION OF THE UNIT.

USER'S WARRANTY CLAIMS SHALL BE SUBJECT TO REVIEW ONLY UPON PRESENTATION OF THE UNIT, THE PAYMENT DOCUMENT AND THE USER'S MANUAL WITH THE PURCHASE DATE STAMP.

CERTIFICATE OF ACCEPTANCE

Unit Type	Industrial electric axial fans
Model	OV / OVK / OV1 / OV1 R / OVK1 / VKF / VKOM / OVP _____
Serial Number	
Manufacture Date	
Quality Inspector's Stamp	

SELLER INFORMATION

Seller	
Address	
Phone Number	
E-mail	
Purchase Date	
This is to certify acceptance of the complete unit delivery with the user's manual. The warranty terms are acknowledged and accepted.	
Customer's Signature	

Seller's Stamp

INSTALLATION CERTIFICATE

The OV / OVK / OV1 / OV1 R / OVK1 / VKF / VKOM / OVP _____ unit is installed pursuant to the requirements stated in the present user's manual.		
Company name		
Address		
Phone Number		
Installation Technician's Full Name		
Installation Date:	**Signature:**	
The unit has been installed in accordance with the provisions of all the applicable local and national construction, electrical and technical codes and standards. The unit operates normally as intended by the manufacturer.		
Signature:		

Installation Stamp

WARRANTY CARD

Unit Type	Industrial electric axial fans
Model	OV / OVK / OV1 / OV1 R / OVK1 / VKF / VKOM / OVP _____
Serial Number	
Manufacture Date	
Purchase Date	
Warranty Period	
Seller	

Seller's Stamp

V03EN-10